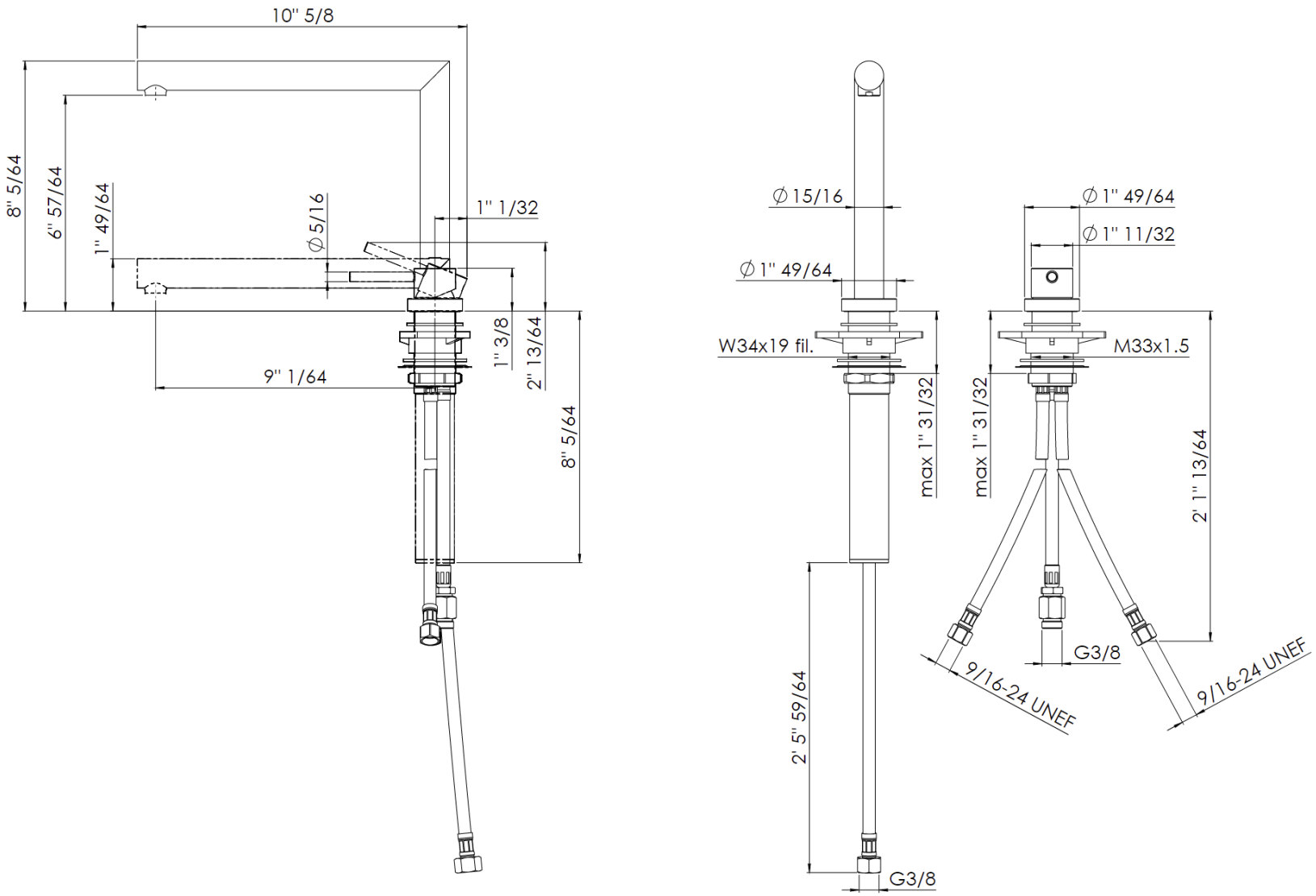
10" 5/8
8" 5/64
6" 57/64
1" 49/64
∅5/16
1" 1/32
1" 3/8
2" 13/64
9" 1/64
8" 5/64
∅15/16
∅1" 49/64
W34x19 fil.
max 1" 31/32
2' 5" 59/64
G3/8
∅1" 49/64
∅1" 11/32
M33x1.5
max 1" 31/32
2' 1" 13/64
G3/8
9/16-24 UNEF
9/16-24 UNEF

BAVENO MOVE